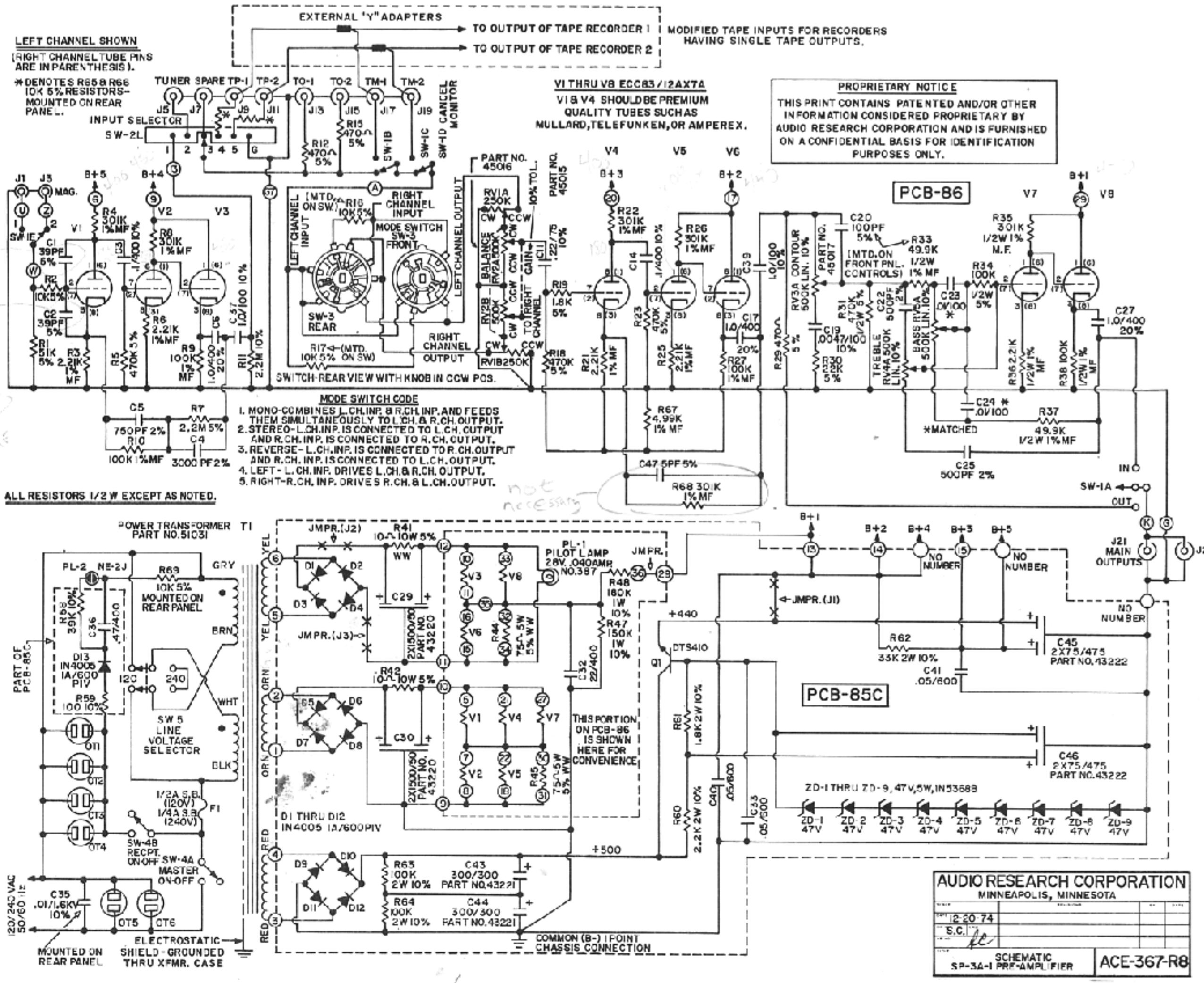

SCHEMATIC DIAGRAM